EN

DETAILED INSTRUCTIONS FOR USE
OF UPRIGHT REFRIGERATOR AND FREEZER

AR

تعليمات الاستخدام المفصّلة حول استخدام الثلاجة والمجمدة الرأسية

EN

gorenje

DETAILED INSTRUCTIONS FOR USE
OF UPRIGHT REFRIGERATOR AND FREEZER



NRF7181MX

Contents

Safety and warning information….....2
Installing your new appliance……....8
Description of the appliance….....…10
Display controls……..…..11
Using your appliance…….....12
Helpful hints and tips…… 14
Cleaning and care……15
Troubleshooting……16
Disposal of the appliance……17

Safety and warning information

For your safety and correct usage, before installing and first using the appliance, read this user manual carefully, including its hints and warnings. To avoid unnecessary mistakes and accidents, it is important to make sure that all people using the appliance are thoroughly familiar with its operation and safety features. Save these instructions and be sure that they remain with the appliance if it is moved or sold, so that anyone using it throughout its life, will be properly informed on its usage and safety notices.
For the safety of life and property, keep the precautions of these user's instructions as the manufacturer is not responsible for damages caused by omission.

Safety for children and otherswho are vulnerable people

- According to EN standard
  This appliance can be used by children aged from 8 years and above and persons with reduced physical, sensory or mental capabilities or lack of experience and knowledge if they have been given supervision or instruction concerning use of the appliance in a safe way and understand the hazards involved. Children shall not play with the appliance. Cleaning and user maintenance shall not be made by children without supervision.
  According to IEC standard
  This appliance is not intended for use by persons (including children) with reduced physical, sensory or mental capabilities, or lack of experience and knowledge, unless they have been given supervision or instruction concerning use of the appliance by a person responsible for their safety.

- Keep all packaging away from children as there is risk of suffocation.
- If you are discarding the appliance, pull the plug out of the socket, cut the connection cable (as close to the appliance as you can) and remove the door to prevent children playing from suffering an electric shock or from closing themselves inside it.
- If this appliance, featuring a magnetic door seals, is to replace an older appliance having a spring lock (latch) on the door or lid, be sure to make the spring lock unusable before you discard the old appliance. This will prevent it from becoming a death trap for a child.

General safety



- WARNING —This appliance is intended to be used in household and similar applications such as
  -staff kitchen areas in shops, offices and other working environments;
  -farm houses and by clients in hotels, motels and other residential type environments;
  -bed and breakfast type environments;
  -catering and similar non-retail applications.
- WARNING — Do not store explosive substances such as aerosol cans with a flammable propellant in this appliance.
- WARNING — If the supply cord is damaged, it must be replaced by the manufacturer, its service agent or similarly qualified persons in order to avoid a hazard.
- WARNING — Keep ventilation openings, in the appliance enclosure or in the built-in structure, clear of obstruction.
- WARNING — Do not use mechanical devices or other means to accelerate the defrosting process, other than those recommended by the manufacturer.
- WARNING — Do not damage the refrigerant circuit.
- WARNING — Do not use electrical appliances inside the food storage compartments of the appliance, unless they are of the type recommended by the manufacturer.

- WARNING — The refrigerant and insulation blowing gas are flammable. When disposing of the appliance, do so only at an authorized waste disposal centre. Do not expose to flame.
- WARNING —When positioning the appliance, ensure the supply cord is not trapped or damaged.
- WARNING —Do not locate multiple portable socket-outlets or portable power supplies at the rear of the appliance.

Replacing the illuminating lamps

- WARNING—The illuminating lamps must not be replaced by the user! If the illuminating lamps is damaged, contact the customer helpline for assistance.

This warning is only for refrigerators that contain illuminating lamps.

Refrigerant

The refrigerant isobutene (R600a) is contained within the refrigerant circuit of the appliance, a natural gas with a high level of environmental compatibility, which is nevertheless flammable. During transportation and installation of the appliance, ensure that none of the components of the refrigerant circuit becomes damaged.
The refrigerant (R600a) is flammable.

- WARNING — Refrigerators contain refrigerant andgases in the insulation. Refrigerant and gases must be disposed of professionally as they may cause eye injuries or ignition. Ensure that tubing of the refrigerant circuit is not damage prior to proper disposal.



WARNING:risk of fire

If the refrigerant circuit should be damaged:
-Avoid opening flames and sources of ignition.
-Thoroughly ventilate the room in which the appliance is situated.

It is dangerous to alter the specifications or modify this product in any way.
Any damage to the cord may cause a shortcircuit, fire, and/or electric shock.

Electrical safety

1.The power cord must not be lengthened.
2. Make sure that the power plug is not crushed or damaged. A crushed or damaged power plug may overheat and cause a fire.
3. Make sure that you can access the main plug of the appliance.
4. Do not pull the main cable.
5. If the power plug socket is loose, do not insert the power plug. There is a risk of electric shock or fire.
6.You must not operate the appliance without the interior lighting lamp cover.
7.The fridge is only applied with power supply of single phase alternating current of 220~240V/50Hz. If fluctuation of voltage in the district of user is so large that the voltage exceeds the above scope, for safety sake, be sure to apply A.C. Automatic voltage regulator of more than 350W to the fridge. The fridge must employ a special power socket instead of common one with other electric appliances. Its plug must match the socket with ground wire.

Daily use

- Do not store flammable gass or liquids in the appliance, There is a risk of an explosion.
- Do not operate any electrical appliances in the appliance (e.g.electric ice cream makers,mixers etc.).
- When unplugging always pull the plug from the mains socket,do not pull on the cable.
- Do not place hot items near the plastic components of this appliance.

- Do not place food products directly against the air outlet on the rear wall.
- Store pre-packed frozen food in accordance with the frozen food manufacture's instructions.
- The appliances manufactures storage recommendations should be strictly adhered to.Refer to relrelevant instructions for storage.
- Do not place carbonated or fizzy drinks in the freeze compartment as it creates pressure on the container,which may cause it to explode,resulting in damage to the appliance.
- Frozen food can cause frost burns if consumed straight from the freezer compartment.
- Do not place the appliance in direct sunlight.
- Keep buring candles,lamps and other items with naked flames away from the appliance so that do not set the appliance on fire.
- The appliance is intended for keeping food stuff and/or beverages in normal household as explained in this instruction booklet The appliance is heavy.Care should be taken when moving it.
- Do not remove nor touch items from the freezer compartment if your hands are damp/wet,as this could cause skin abrasions or frost/freezer burns.
- Never use the base,drawers, doors etc. to stand on or as supports.
- Frozen food must not be refrozen once it has been thawed out.
- Do not consume ice popsicles or ice cubes straight from the freezer as this can cause freezer burn to the mouth and lips.
- To avoid items falling and causing injury or damage to the appliance, do not overload the door racks or put too much food in the crisper drawers.

caution!

Care and cleaning

- Before maintenance, switch off the appliance and disconnect the mains plug from the mains socket.
- Do not clean the appliance with metal objects, steam cleaner, ethereal oils, organic solvents or abrasive cleansers.
- Do not use sharp objects to remove frost from the appliance. Use a plastic scraper.

Installation Important!

- For electrical connection carefully, follow the instructions given in this manual.
  Unpack the appliance and check if there are damages on it.
- Do not connect the appliance if it is damaged. Report possible damages immediately to the place you bought it. In this case retain packing.
- It is advisable to wait at least four hours before connecting the appliance to allow the oil to flow back in the compressor.
- Adequate air circulation should be around the appliance, lacking this leads to overheating. To achieve sufficient ventilation, follow the instructions relevant to installation.
- Wherever possible the back of the product should not be too close to a wall to avoid touching or catching warm parts (compressor, condenser) to prevent the risk of a fire, follow the instructions relevant to installation.
- The appliance must not be locate close to radiators or cookers.
- Make sure that the mains plug is accessible after the installation of the appliance.

Service

- Any electrical work required to do the servicing of the appliance should be carried out by qualified electrician or competent person.
- This product must be serviced by an authorized Service Center, and only genuine spare parts must be used.
  1)If the appliance is Frost Free.
  2)If the appliance contains freezer compartment.

Installing your new appliance

Before using the appliance for the first time, you should be informed of the following tips.

Ventilation of appliance

In order to improve efficiency of the cooling system and save energy, it is necessary to maintain good ventilation around the appliance for the dissipation of heat. For this reason, sufficient clear space should be available around the refrigerator.
Suggest :It is advisable for there to be 50-70mm of space from the back to the wall, at least 100mm from its top,at last 100mm from its side to the wall and a clear space in front to allow the doors to open 145°. As shown in following diagrams.

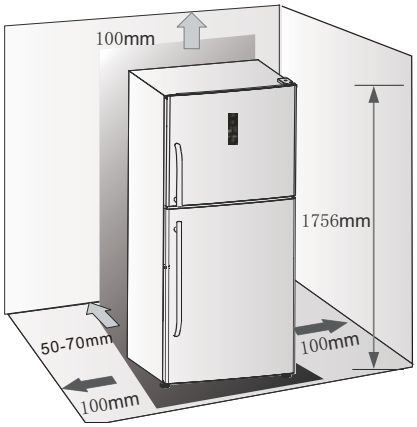

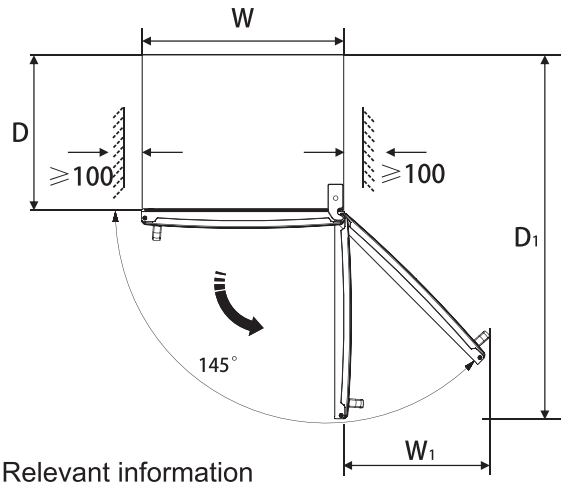

Relevant information

Constant /mm / Model	W	W1	D	D1
	790	638	600	1416

Note:

This appliance performs well within the climate class showed in the table below.

It may not work properly if being left at a temperature above or below the indicated range for a long period.

Class	Symbol	Ambient Temperature range(°C)
Extended Temperate	SN	+10 to +32
Temperate	N	+16 to +32
Subtropical	ST	+16 to +38
Tropical	T	+16 to +43

- Stand your appliance in a dry place to avoid high moisture.
- Keep the appliance out of direct sunlight, rain or frost. Stand the appliance away from heat sources such as stoves, fires or heaters.

Leveling of appliance

The appliance should be level in order to eliminate vibration. We recommend that you level the appliance by the following steps.

1. Roll the refrigerator into place.
2. Turn the adjustable feet (with your fingers or a suitable spanner) until it touches the floor.
3. Tilt back the top backwards for about 10-15 mm by turn the feet 1-2 turn further. This will allow the doors to self-close, providing a consistent closed seal.
4. Whenever you want to move the appliance, remember to turn the feet back up so that the appliance can roll freely. Reinstall the appliance when relocating.

Caution! The rollers, which are not castors, should be only used for forward or backward movement. Moving the refrigerator sideways may damage your floor and the rollers.

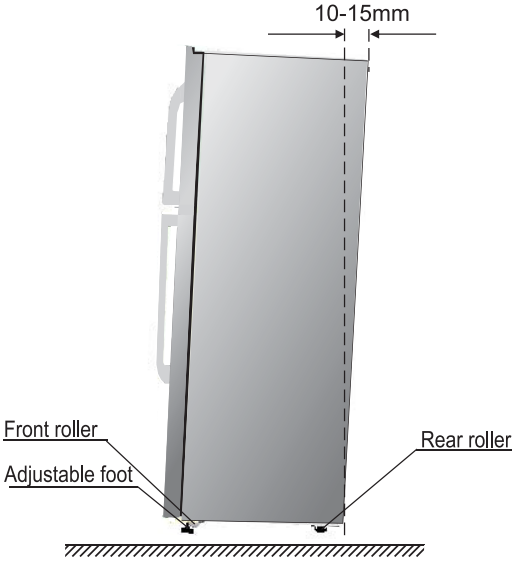

Fixing the handle

Before you use the product, please check the handle of the refrigerator . If the handle is loose, you should fix it with the hexangular screwdriver in the clockwise direction, then it can be used normally.

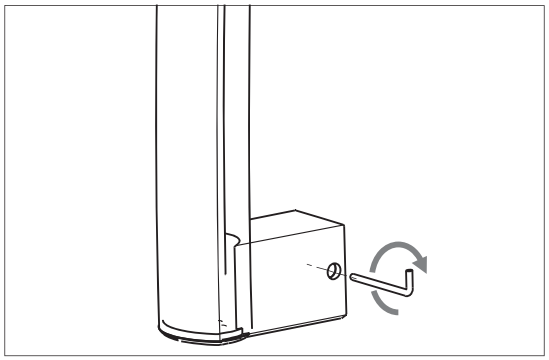

Description of the appliance

View of the appliance

1 Light cover
2 LED light (inside)
3 Screw hole cover
4 Wind channel part in freezer chamber
5 Shelf part
6 Ice tray part
7 Ice box
8 Light cover
9 LED light (inside)
10 Wind channel part in refrigerator chamber
11 Shelf part
12 Shelves assembly
13 Multifunctional drawer
14 Shelves assembly
15 Crisper box part
16 Roll wheel
17 Adjustable bottom feet part
18 Upper hinge cover
19 Door switch
20 Freezerd oor rack
21 Gasket part
22 Middle hinge part
23 Shelf cover
24 Egg tray
25 Small shelf
26 Door switch
27 Refrigerator door rack(middle)
28 Gasket part
29 Refrigerator door rack(lower)

FREEZER

REFRIGERATOR

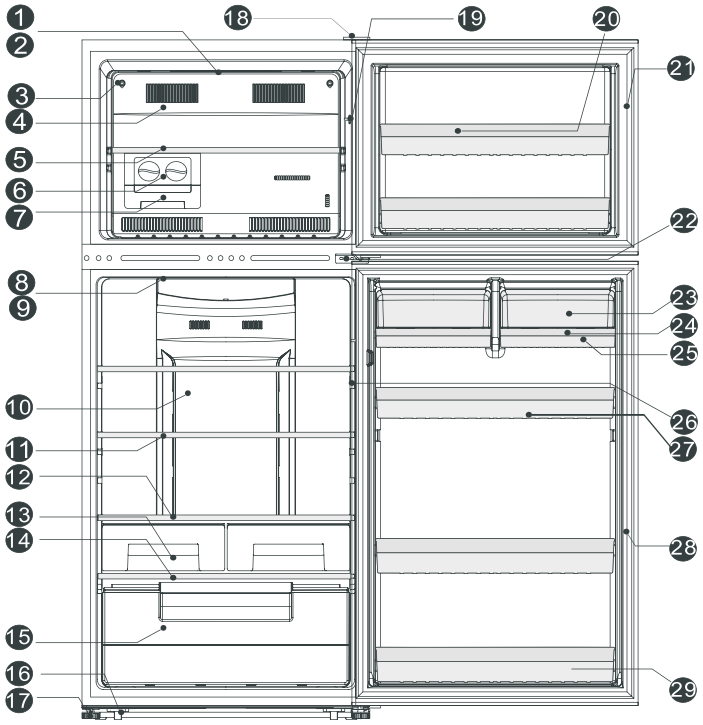

Note: Due to unceasing modification of our products your refrigerator may be slightly different from this Instruction Manual, but its functions and using methods remain the same.

Display controls

Use your appliance according to the following control regulations, your appliance has the corresponding functions and modes as the control panels showed in the pictures below. When the appliance is powered on for the first time, the backlighting of the icons on display panel starts working. If no buttons have been pressed and the doors are closed, the backlighting will turn off.



Controlling the temperature

We recommend that when you start your refrigerator for the first time, the temperature for the refrigerator is set to 5°C and the freezer to -18°C. If you want to change the temperature, follow the instructions below.

Caution! When you set a temperature, you set an average temperature for the whole refrigerator cabinet.

Temperatures inside each compartment may vary from the temperature values displayed on the panel, depending on how much food you store and where you place them. Ambient temperature may also affect the actual temperature inside the appliance.

1. Freezer

Press “Freezer” to set freezer temperature between -14℃ and -24℃ as needed, and the control panel will display corresponding value according to the following sequence.

-14℃ — -15℃ — -16℃ — -17℃ — -18℃ — -19℃
-24℃ — -23℃ — -22℃ — -21℃ — -20℃

2. Super Freeze



Super Freeze can quickly lower frozen temperature and freeze your food faster than usual. This can lock the vitamins and nutrition of fresh food and keep your food longer.

● Press “Super Freeze” button to activate the super freeze function. The light will come on and the freezer temperature setting displays -24°C.

●In case of the maximum amount of food to be frozen, we recommend that you let the appliance operates for 6 hours first.

● Super freeze automatically switches off after 26 hours .

●When super freeze function is on you can switch off super freeze function by pressing “Super Freeze” or “Freezer” button and the freezer temperature setting will revert back to it's previous setting.

3. Fridge

Press “Fridge” to set fridge temperature between 2℃ and 8℃ as needed, and control panel will display corresponding values according to the following sequence.

8°C — 7°C — 6°C — 5°C
2°C — 3°C — 4°C

4. Super Cool



Super Cool can refrigerate your food much faster, keeping food fresh for a longer period

●Press” Super Cool” button to activate this function. The light will be illuminated, and the refrigerator temperature setting displays 2°C.

●Super cool automatically switches off after 6 hours.

● When super cool function is on you can switch it off by pressing “Super Cool” or “Fridge” button and the refrigerator temperature setting will revert back to the previous setting.

5. Holiday



If you are going to be away for a long period of time such as a long holiday or business trip, you can activate this function by pressing "Holiday" button for 3 seconds until the light will be illuminated.

●When the holiday function is activated, the temperature of the fridge is automatically switched to 15°C. The fridge temperature setting displays "-" and the freezer compartment remains on.

Important! Do not store any food in the fridge during this time, or they will soon go off.

●When the holiday function is on, you can switch off it by pressing any button of "Holiday", "Fridge" and "Super Cool" button. The fridge temperature will revert back to it's previous setting.

6.Alarm



In case of alarm, "Alarm" icon will be on and there will be buzzing sound. Press "Alarm" key to clear alarm and then "Alarm" icon will turn off and stop buzzing.

Door Alarm

●When door of fridge or freezer is open for over 2 minutes, door alarm will come on. In case of door alarm, buzzer will sound 3 times per minute and stop alarm about 10 minutes later.

● To save energy, please avoid keeping doors open for a long time when using refrigerator. In case of door alarm, it can also clear door alarm by closing the doors.

Temperature alarm

● If freezer temperature is too high due to power failure or other reasons, it will give temperature alarm and the freezer temperature setting displays "--".

● In case of temperature alarm, buzzer will sound constantly for 10 times.

● In case of temperature alarm, press "Alarm" button for 3 seconds to check the highest freezer temperature. The temperature value and "Alarm" icon will simultaneously flash for 5 seconds.

Caution! When refrigerator is powered on again, it is normal to appear temperature alarm and you can press "Alarm" to clear it.

Using your appliance

You appliance has the accessories as the ″Description of the appliance" showed in general, with this part instruction you can have the right way to use them.

Door rack

●It is suitable for the storage of eggs, canned liquid, bottled drinks and packed food, etc. Do not place too many heavy things in the racks

●The middle door shelf can be placed at different heights according to your requirements. Please take food out of the shelf before lifting vertically to reposition.

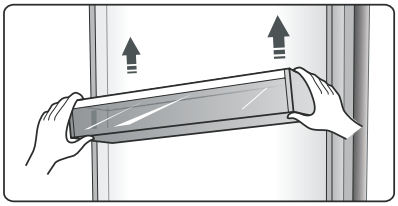

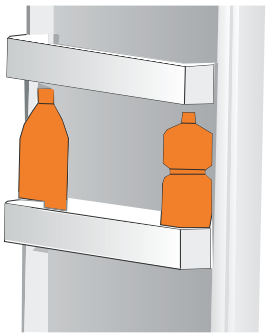

Note: There are egg trays in the upper shelf and bottle holder in the lower shelf.

Shelf in Refrigerator chamber

There are shelves in refrigerator chamber, and they can be taken out to be cleaned.

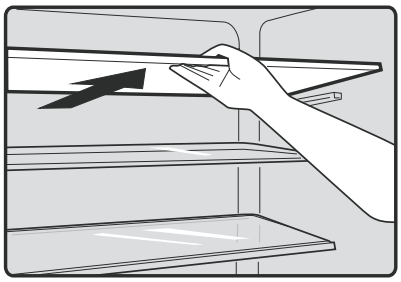

Crisper and Humidity control

The crisper is for storing vegetables and fruits. You can adjust the humidity inside by using the sliding block.

● The sliding block on crisper cover can slide to left or right and the air hole become more or less relatively. More air hole opening means less humidity and less means more humidity.

●We recommend that you store vegetables with more humidity and fruit less humidity.

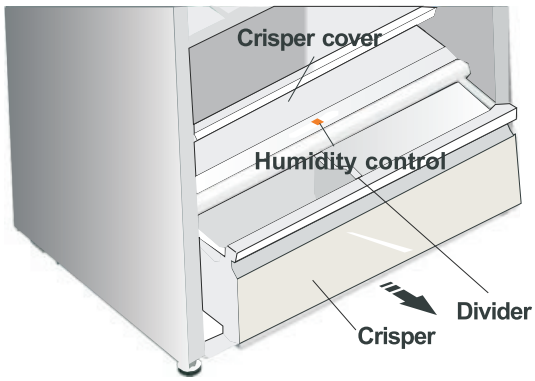

● When you remove the crisper, pull them forward, then lift the crisper off the slides. Remember to empty food in the crisper firstly. Once you have removed the drawers, ensure the slides are pushed back fully.

●Divider easily manage crisper space as you store separate food.

Twistable ice tray

The twistable ice tray is used to make and deposit ice cubes. You should use it as follows.

1.Pull out the twistable ice tray from the installation bracket.

2.Fill the drinking water inside (do not fill above the max water level).

3.Place the filled ice tray back to the bracket.

4.Await for around 3 hours, twist the knobs clockwise and the ice will drop into the ice box below.

Notice :

Ice box is inadvisable to be used to make ice,otherwise it may crack.

If it takes a long time to make ice, do not hold the ice tray directly to avoid the ice tray sticking and hurting your hands.

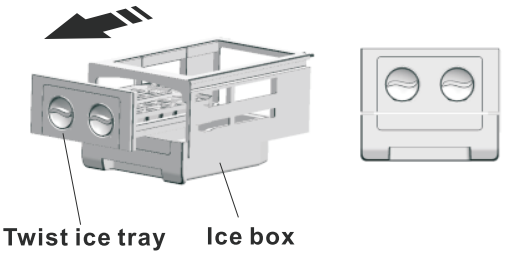

Helpful hints and tips

Energy saving tips

We recommend that you follow the tips below to save energy.

- Try to avoid keeping the door open for long periods in order to conserve energy.
- Ensure the appliance is away from any sources of heat (Direct sunlight, electric oven or cooker etc)
- Don't set the temperature colder than necessary.
- Don't store warm food or evaporating liquid in the appliance.
- Place the appliance in a well ventilated, humidity free, room. Please refer to Installing your new appliance chapter.
- If the diagram shows the correct combination for the drawers, crisper and shelves, do not adjust the combination as this is designed to be the most energy efficient configuration.

Hints for fresh food refrigeration

- Do not place hot food directly into the refrigerator or freezer, the internal temperature will increase resulting in the compressor having to work harder and will consume more energy.
- Do cover or wrap the food, particularly if it has a strong flavor.
- Place food properly so that air can circulate freely around it.

Hints for refrigeration

- Meat (All Types) Wrap in polythene food: wrap and place on the glass shelf above the vegetable drawer. Always follow food storage times and use by dates suggested by manufacturers.
- Cooked food, cold dishes, etc.:

They should be covered and may be placed on any shelf.

- Fruit and vegetables:

They should be stored in the special drawer provided.

- Butter and cheese:

Should be wrapped in airtight foil or plastic film wrap.

- Milk bottles:

Should have a lid and be stored in the door racks.

Hints for freezing

- When first starting-up or after a period out of use, let the appliance run at least 2 hours on the higher settings before putting food in the compartment.
- Prepare food in small portions to enable it to be rapidly and completely frozen and to make it possible to subsequently thaw only the quantity required.
- Wrap up the food in aluminum foil or polyethylene food wraps which are airtight,
- Do not allow fresh, unfrozen food to touch the food which is already frozen to avoid temperature rise of the latter.
- Iced products, if consumed immediately after removal from the freezer compartment, will probably cause frost burns to the skin.
- It is recommended to label and date each frozen package in order to keep track of the storage time.

Hints for the storage of frozen food

- Ensure that frozen food has been stored correctly by the food retailer
- Once defrosted, food will deteriorate rapidly and should not be re-frozen. Do not exceed the storage period indicated by the food manufacturer.

Switching off your appliance

If the appliance needs to be switched off for an extended period, the following steps should be taken prevent mould on the appliance.

1. Remove all food.
2. Remove the power plug from the mains socket.
3. Clean and dry the interior thoroughly.
4. Ensure that all the doors are wedged open slightly to allow air to circulate.

Cleaning and care

For hygienic reasons the appliance (including exterior and interior accessories) should be cleaned regularly at least every two months.

Caution! The appliance must not be connected to the mains during cleaning. Danger of electrical shock! Before cleaning switch the appliance off and remove the plug from the mains socket.

Exterior cleaning

To maintain good appearance of your appliance, you should clean it regularly.

-Wipe the digital panel and display panel with a clean, soft cloth.

-Spray water onto the cleaning cloth instead of spraying directly on the surface of the appliance. This helps ensure an even distribution of moisture to the surface.

-Clean the doors, handles and cabinet surfaces with a mild detergent and then wiped dry with a soft cloth.

Caution!

-Don't use sharp objects as they are likely to scratch the surface.

-Don't use Thinner, Car detergent, Clorox, ethereal oil, abrasive cleansers or organic solvent such as Benzene for cleaning. They may damage the surface of the appliance and may cause fire.

Interior cleaning

You should clean the appliance interior regularly. It will be easier to clean when food stocks are low. Wipe the inside of the fridge freezer with a weak solution of bicarbonate of soda, and then rinse with warm water using a wrung-out sponge or cloth. Wipe completely dry before replacing the shelves and baskets.

Thoroughly dry all surfaces and removable parts.

Although this appliance automatically defrosts, a layer of frost may occur on the freezer compartment's interior walls if the freezer door is opened frequently or kept open too long. If the frost is too thick, choose a time when the supply of food stocks are low and proceed as follows:

1.Remove existing food and accessories baskets, unplug the appliance from the mains power and leave the doors open. Ventilate the room thoroughly to accelerate the thawing process.

2. When defrosting is completed, clean your freezer as described above.

Caution! Don't use sharp objects to remove frost from the freezer compartment. Only after the interior is completely dry should the appliance be switched back on and plugged back into the mains socket.

Door seals cleaning

Take care to keep door seals clean. Sticky food and drinks can cause seals to stick to the cabinet and tear when you open the door. Wash seal with a mild detergent and warm water. Rinse and dry it thoroughly after cleaning.

Caution! Only after the door seals are completely dry should the appliance be powered on.

Replacing the LED light:

Warning: The LED light must not be replaced by the user! If the LED light is damaged, contact the customer helpline for assistance. To replace the LED light, the below steps can be followed:

1. Unplug your appliance.

2. Remove light cover by pushing up and out.

3. Hold the LED cover with one hand and pull it with the other hand while pressing the connector latch.

4. Replace LED light and snap it correctly in place.

Troubleshooting

If you experience a problem with your appliance or are concerned that the appliance is not functioning correctly, you can carry out some easy checks before calling for service, please see below. You can carry out some easy checks according to this section before calling for service.

Warning! Don't try to repair the appliance yourself. If the problem persists after you have made the checks mentioned below, contact a qualified electrician, authorized service engineer or the shop where you purchased the product.

Problem	Possible cause & Solution
Appliance is not working correctly	Check whether the power cord is plugged into the power outlet properly.
	Check the fuse or circuit of your power supply, replace if necessary.
	The ambient temperature is too low. Try setting the chamber temperature to a colder level to solve this problem.
	It is normal that the freezer is not operating during the automatic defrost cycle, or for a short time after the appliance is switched on to protect the compressor.
Odours from the compartments	The interior may need to be cleaned
	Some food, containers or wrapping cause odours.
Noise from the appliance	The sounds below are quite normal: ●Compressor running noises. ●Air movement noise from the small fan motor in the freezer compartment or other compartments. ●Gurgling sound similar to water boiling. ●Popping noise during automatic defrosting. ●Clicking noise before the compressor starts.
	Other unusual noises are due to the reasons below and may need you to check and take action: The cabinet is not level. The back of appliance touches the wall. Bottles or containers fallen or rolling.
The motor runs continuously	It is normal to frequently hear the sound of the motor, it will need to run more when in following circumstances: ● Temperature setting is set colder than necessary ● Large quantity of warm food has recently been stored within the appliance. ●The temperature outside the appliance is too high. ●Doors are kept open too long or too often. ●After your installing the appliance or it has been switched off for a long time.
A layer of frost occurs in the compartment	Check that the air outlets are not blocked by food and ensure food is placed within the appliance to allow sufficient ventilation. Ensure that door is fully closed. To remove the frost, please refer to cleaning and care chapter.

Temperature inside is too warm	You may have left the doors open too long or too frequently; or the doors are kept open by some obstacle; or the appliance is located with insufficient clearance at the sides, back and top
Temperature inside is too cold	Increase the temperature by following the "Display controls" chapter.
Doors cant be closed easily	Check whether the top of the refrigerator is tilted back by 10-15mm to allow the doors to self close, or if something inside
	is preventing the doors from closing.
Water drips on the floor	The water pan (located at the rear bottom of the cabinet) may not be properly leveled, or the draining spout （located underneath the top of the compressor depot） may not be properly positioned to direct water into this pan, or the water spout is blocked. You may need to pull the refrigerator away from the wall to check the pan and spout.
The light is not working	●The LED light may be damaged. Refer to replace LED lights in cleaning and care chapter. ●The control system has disabled the lights due to the door being kept open too long, close and reopens the door to reactivate the lights.

Disposal of the appliance

It is prohibited to dispose of this appliance as household waste.

Packaging materials

Packaging materials with the recycle symbol are recyclable. Dispose of the packaging into a suitable waste collection container to recycle it.

Before disposal of the appliance

1. Pull out the mains plug from the mains socket.
2. Cut off the power cord and discard with the mains plug

Warning! Refrigerators contain refrigerant and gases in the insulation. Refrigerant and gases must be disposed of professionally as they may cause eye injuries or ignition. Ensure that tubing of the refrigerant circuit is not damage prior to proper disposal.

	Correct Disposal of this product
	This symbol on the product or in its packing indicates that this product may not be treated as household waste. Instead, it should be taken to the appropriate waste collection point for the recycling of electrical and electronic equipment. By ensuring this product is disposed of correctly, you will help prevent potential negative consequences for the environment and human health, which could otherwise be caused by the inappropriate waste handling of this product. For more detailed information about the recycling of this product, please contact your local council your household waste disposal service, or the shop where you purchased the product.

Gorenje, d.o.o.
Partizanska 12
SI - 3320 Velenje, Slovenija
info@gorenje.com
www.gorenje.com